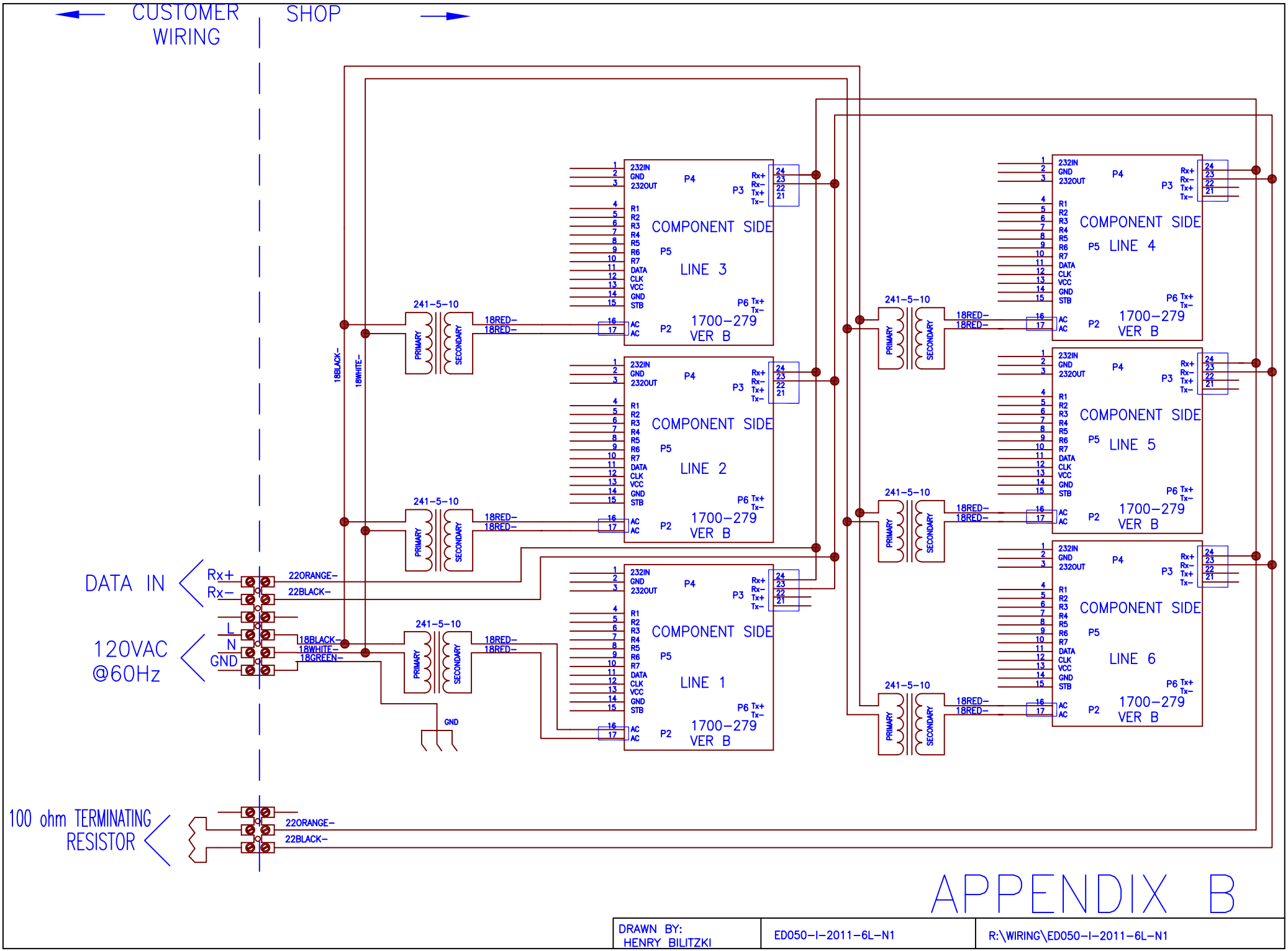

APPENDIX B

DRAWN BY: HENRY BILITZKI	ED050−I−2011−6L−N1	R:\WIRING\ED050−I−2011−6L−N1